M-LED

MODULAR LIGHTING — INSTRUMENTS

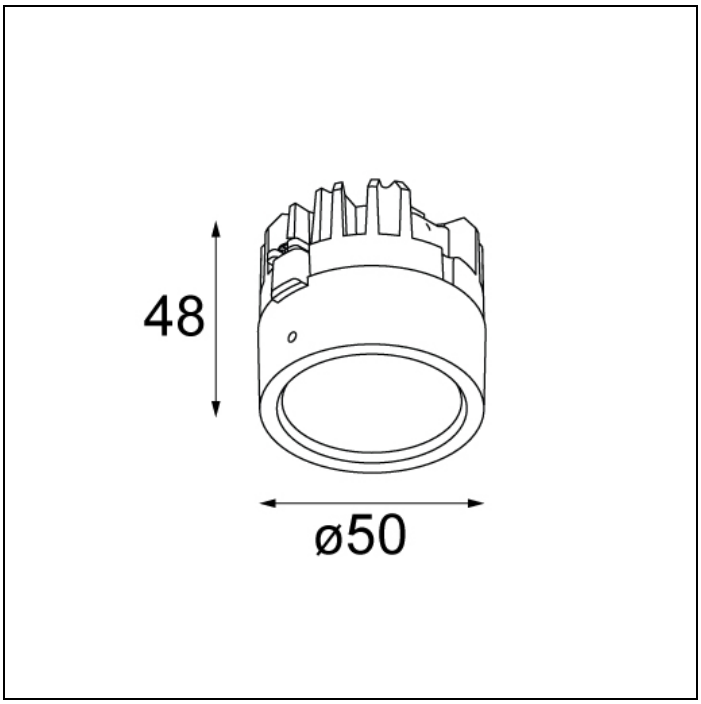

M-LED 50 GE

After introducing the M-LED 111 and M-LED 70 modules, Modular has again prepared some icons to be LED-ified. Replacing the well-known MR16 lamp, the M-LED 50 module is designed for Lotis for LED, Asy lotis for LED and Lotis square for LED. M-LED 111 is your solution for the Haloscan for LED and Multiple (trimless) for LED series, while M-LED 70 seamlessly fits your Mini multiple (trimless) for LED.

Art. Nr. 14061105

SPECIFICATIONS

Lamp	1x LED Array	
Gear / Transfo	LED gear not incl.	
Weight	0.14kg	
Min. Distance		
IP	IP20	
Glow Wire Test		
CRI	90	
Power supply	350mA	**500mA**
	17.8Vf	**18.4Vf**
Connected load	6.2W	**9.2W**
Lumen	590lm	**792lm**
Efficacy	95lm/W	**86lm/W**
UGR	21	**22**
Adjustability	Not Applicable	
Remark	! can be combined with Lotis, Asy Lotis and Lotis square	

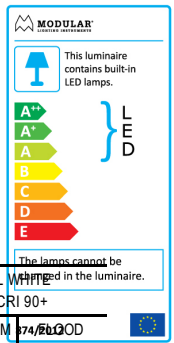

This label is available in other languages:
http://supermodular.com/assets/TYPE2.pdf

	WARM WHITE 2700K / CRI 90+			WARM WHITE 3000K / CRI 90+			NEUTRAL WHITE 3500K / CRI 90+			NEUTRAL WHITE 4000K / CRI 90+		
	SPOT 15°	MEDIUM 25°	FLOOD 40°	SPOT 15°	MEDIUM 25°	FLOOD 40°	SPOT 15°	MEDIUM 25°	FLOOD 40°	SPOT 15°	MEDIUM 25°	FLOOD 40°
alu	14060005	14060105	14060205	14060305	14060405	14060505	14060605	14060705	14060805	14060905	14061005	14061105

Modular reserves the right to alter material, dimensions and characteristics without prior notice. Lighting technology changes rapidly. Latest datasheet and documentation available on www.supermodular.com.

19/12/2017 - ©2017 Modular Lighting Instruments

M-LED 50 GE

ACCESSORIES

HUE-MODULE

13190030	MODULAR CONNECTED 1-10V WHITE COMPONENT

HUE-BRIDGE

70000616	PHILIPS HUE BRIDGE EU
70000617	PHILIPS HUE BRIDGE UK

HUE-DEVICE

70000614	PHILIPS HUE DIMMER SWITCH
70000615	PHILIPS HUE TAP SWITCH
70000847	PHILIPS HUE SENSOR

Modular reserves the right to alter material, dimensions and characteristics without prior notice.
Lighting technology changes rapidly. Latest datasheet and documentation available on
www.supermodular.com.

19/12/2017 - ©2017 Modular Lighting Instruments