MINI MULTIPLE

MODULAR LIGHTING — INSTRUMENTS

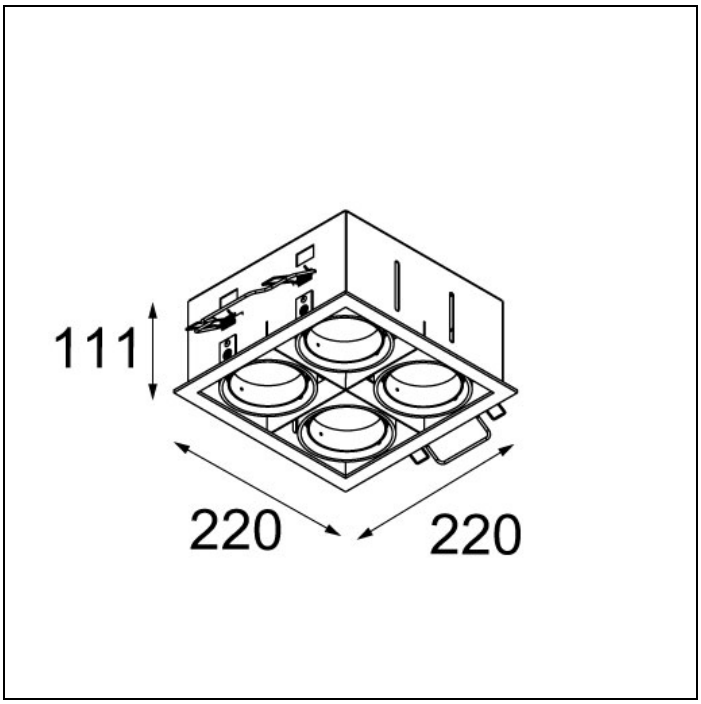

MINI MULTIPLE FOR 4X LED GE

Twenty years after its initial launch, Mini multiple is still a coveted luminaire. Mini multiple is the reference of our architectural lighting portfolio. The technology is on full display and allows this luminaire to fit well into both a minimalist and an industrial-chic environment. The gimbaled system allows you to direct the light source at any angle of your choice. Mini multiple has a very subtle alu trim. Available in one-, two-, three- and four lamps versions in different colours. Connect Mini multiple with Smart by adding the Smart frontrings to your recessed spot.

alu - black	13130305
white struc	13130309

Art. Nr. 13130309

SPECIFICATIONS

Lamp	4x LED (not incl.)
Gear / Transfo	LED gear not incl.
Cut-out size	l 210 w 210 h 120
Weight	1.72kg
Min. Distance	0.1 m
Power supply	
IP	IP20
Glow Wire Test	960°
Adjustability	v -35°/+35°
Remark	! must be used with M-LED 70

Modular reserves the right to alter material, dimensions and characteristics without prior notice. Lighting technology changes rapidly. Latest datasheet and documentation available on www.supermodular.com.

19/12/2017 - ©2017 Modular Lighting Instruments

MINI MULTIPLE FOR 4X LED GE

ACCESSORIES

M-LED

14070002	M-LED 70 2700K SPOT GE BLACK MATT
14070102	M-LED 70 2700K MEDIUM GE BLACK MATT
14070202	M-LED 70 2700K FLOOD GE BLACK MATT
14070209	M-LED 70 2700K FLOOD GE WHITE STRUC
14070109	M-LED 70 2700K MEDIUM GE WHITE STRUC
14070302	M-LED 70 3000K SPOT GE BLACK MATT
14070009	M-LED 70 2700K SPOT GE WHITE STRUC
14070309	M-LED 70 3000K SPOT GE WHITE STRUC
14070402	M-LED 70 3000K MEDIUM GE BLACK MATT
14070409	M-LED 70 3000K MEDIUM GE WHITE STRUC
14070502	M-LED 70 3000K FLOOD GE BLACK MATT
14070609	M-LED 70 4000K SPOT GE WHITE STRUC
14070509	M-LED 70 3000K FLOOD GE WHITE STRUC
14070809	M-LED 70 4000K FLOOD GE WHITE STRUC
14070802	M-LED 70 4000K FLOOD GE BLACK MATT
14070709	M-LED 70 4000K MEDIUM GE WHITE STRUC
14070702	M-LED 70 4000K MEDIUM GE BLACK MATT
14070602	M-LED 70 4000K SPOT GE BLACK MATT

HUE-DEVICE

70000847	PHILIPS HUE SENSOR
70000615	PHILIPS HUE TAP SWITCH
70000614	PHILIPS HUE DIMMER SWITCH

HUE-MODULE

13190030	MODULAR CONNECTED 1-10V WHITE COMPONENT

HUE-BRIDGE

70000617	PHILIPS HUE BRIDGE UK
70000616	PHILIPS HUE BRIDGE EU

CONBOX

10400430	CONBOX 357X222X147X421

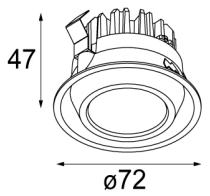

M-LED 70 2700K spot GE black matt

ACCESSORIES

GYPKIT

10420430	GYPKIT 240X387X210X210

Modular reserves the right to alter material, dimensions and characteristics without prior notice.
Lighting technology changes rapidly. Latest datasheet and documentation available on
www.supermodular.com.

19/12/2017 - ©2017 Modular Lighting Instruments