iPro

Design Mario Cucinella **iGuzzini**

Last information update: May 2018

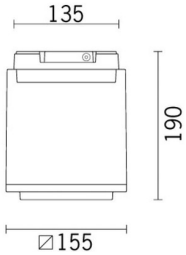

Outdoor ceiling-mounted luminaire - Neutral white LED - with integrated electronic ballast Vin=120-240V ac - Very Wide Flood optic

Product code
BI33

Technical description
Ceiling-mounted luminaire designed to use Neutral White LED lamps and lenses for Very Wide Flood (VWF) distribution. The luminaire consists of an optical assembly/component-holding box and base for ceiling-mounting. The optical assembly, front frame, rear door and ceiling-mounting base are made of die-cast aluminium alloy coated with liquid acrylic paint (colour: RAL 9007 grey) or textured liquid paint (colour: RAL 9016 white) with a high level of resistance to weather and UV rays. The 5 mm thick tempered sodium - calcium safety glass with customised serigraphy is joined to the frame with silicone. The frame is fastened to the optical assembly by two M5 AISI 304 stainless steel captive screws and a steel safety cable. The optical assembly contains the circuit complete with LEDs and relative PMMA plastic lenses. The component-holding box, in the rear of the luminaire, is set up to hold the control gear, which is fixed with captive screws on a galvanised steel pull-out plate. The control gear can be accessed via the ceiling-mounting base with quick-connecting system and the rear door made of painted aluminium alloy, fixed to the product body with four M5 AISI 304 stainless steel captive screws. A galvanised steel safety cable secures the upper base to the product. The internal silicone seals guarantee watertightness IP66. Various accessories are available: accessory-holder frame, visor, directional flaps, glass refractors, diffusers and coloured filters which can be applied in pairs, protective grille. All external screws used are made of A2 stainless steel. The luminaire technical characteristics conform to EN60598-1 standards and particular requirements.

Installation
Ceiling-mounted using the special base. Secure using screw anchors for concrete, cement and solid brick.

Dimension (mm)
155x155x190

Colour
White (01) | Grey (15)

Weight (Kg)
3.96

Mounting
ceiling surface|free standing

Wiring
With integrated electronic ballast Vin=120-240V ac 50/60Hz. The luminaire is set up for pass-through wiring using two PG 13.5 polyamide cable glands, suitable for the entry of cables with diameter between 8.5 and 12.5 mm. The connection to the mains is made using a 3-pole terminal block with quick-coupling system. Cables with quick-coupling terminals connect the terminal block and the control gear.

Notes
Product complete with LED lamp. IK09 with protective grille.

Complies with EN60598-1 and pertinent regulations

960°C IK07 IP66

Product configuration: BI33

Product characteristics

Total lighting output [Lm]: 929	Total luminous flux at or above an angle of 90° [Lm]: 0
Total power [W]: 18.5	Emergency luminous flux [Lm]: /
Luminous efficacy [Lm/W]: 50.2	Voltage [V]: -
Life Time: 100,000h - L80 - B10 (Ta 25°C)	Life Time: 66,000h - L80 - B10 (Ta 40°C)
Ambient temperature range: from -20°C to +35°C.	Number of optical assemblies: 1

Optical assembly Characteristics Type 1

Light Output Ratio (L.O.R.) [%]: 57	Number of lamps for optical assembly: 1
Lamp code: LED	Socket: /
ZVEI Code: LED	Ballast losses [W]: 2.5
Nominal power [W]: 16	Colour temperature [K]: 4000
Nominal luminous [Lm]: 1630	CRI: 80
Lamp maximum intensity [cd]: /	Wavelength [Nm]: /
Beam angle [°]: 80° / 78°	MacAdam Step: 3

Polar

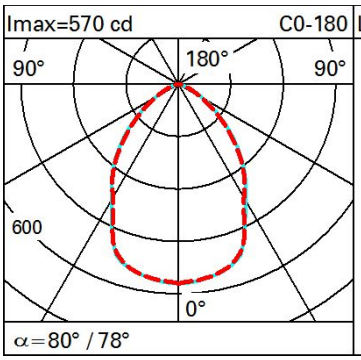

Lux

h	d1	d2	Em	Emax
1	1.7	1.6	390	570
2	3.4	3.2	98	142
3	5	4.9	43	63
4	6.7	6.5	24	36

Isolux

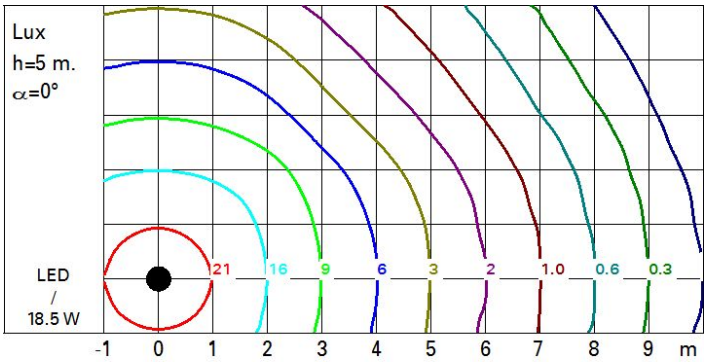

UGR diagram

Corrected UGR values (at 1630 lm bare lamp luminous flux)

Riflect.:											
ceil/cav		0.70	0.70	0.50	0.50	0.30	0.70	0.70	0.50	0.50	0.30
walls		0.50	0.30	0.50	0.30	0.30	0.50	0.30	0.50	0.30	0.30
work pl.		0.20	0.20	0.20	0.20	0.20	0.20	0.20	0.20	0.20	0.20
Room dim				viewed					viewed		
x	y			crosswise					endwise		
2H	2H	22.6	23.6	22.9	23.8	24.1	22.5	23.4	22.8	23.6	23.9
	3H	22.9	23.8	23.3	24.0	24.3	22.6	23.4	22.9	23.7	24.0
	4H	23.0	23.7	23.3	24.0	24.4	22.6	23.3	22.9	23.6	23.9
	6H	23.0	23.7	23.3	24.0	24.3	22.5	23.2	22.9	23.5	23.9
	8H	22.9	23.6	23.3	23.9	24.3	22.5	23.2	22.9	23.5	23.8
	12H	22.9	23.6	23.3	23.9	24.3	22.4	23.1	22.8	23.4	23.8
4H	2H	22.7	23.5	23.1	23.8	24.1	22.8	23.6	23.2	23.9	24.2
	3H	23.1	23.7	23.5	24.1	24.4	23.0	23.6	23.4	24.0	24.4
	4H	23.1	23.7	23.5	24.1	24.5	23.0	23.6	23.4	24.0	24.3
	6H	23.1	23.6	23.6	24.0	24.5	23.0	23.5	23.4	23.9	24.3
	8H	23.1	23.6	23.6	24.0	24.4	23.0	23.4	23.4	23.8	24.3
	12H	23.1	23.5	23.6	23.9	24.4	22.9	23.3	23.4	23.8	24.2
8H	4H	23.1	23.5	23.5	23.9	24.4	23.0	23.5	23.4	23.9	24.3
	6H	23.1	23.5	23.6	23.9	24.4	23.0	23.4	23.5	23.8	24.3
	8H	23.1	23.4	23.6	23.9	24.4	23.0	23.3	23.5	23.8	24.3
	12H	23.1	23.3	23.6	23.8	24.4	22.9	23.2	23.4	23.7	24.2
12H	4H	23.0	23.4	23.5	23.9	24.3	23.0	23.4	23.4	23.8	24.3
	6H	23.1	23.4	23.6	23.9	24.4	23.0	23.3	23.4	23.7	24.2
	8H	23.1	23.3	23.6	23.8	24.3	22.9	23.2	23.4	23.7	24.2

Variations with the observer position at spacing:

S =	1.0H	0.4 / -0.8	0.5 / -0.9
	1.5H	1.7 / -2.4	1.7 / -2.2
	2.0H	3.2 / -3.9	3.2 / -3.7