Arm-mounted luminaire TANEO TND 2100/950/D

113736000-00809767

Waldmann
ENGINEERS OF LIGHT

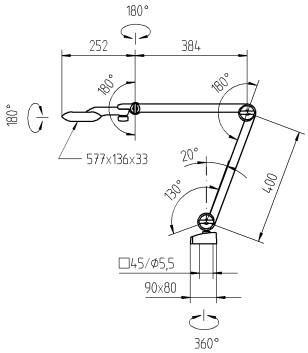

CE UK CA

CEE 7/VII

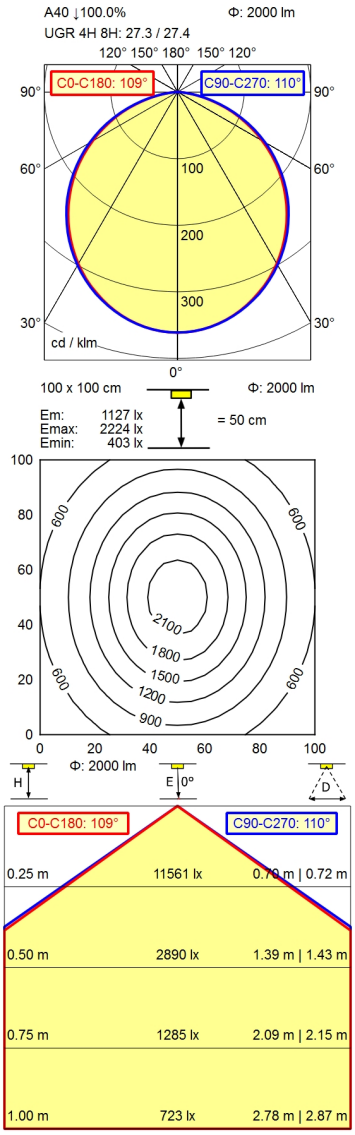

Light source	LED
Work equipment	Electronic transformer
Connected load	100 - 240 V; AC; 50 Hz; 60 Hz
Secondary tension	24 V
Power consumption	ca. 30 W
Sec. power consumption	ca. 26 W
Luminous flux	approx. 2.000 lm
Luminous efficiency	approx. 76 lm/W
Light type/-color	Cold white
Colour temperatur	approx. 5.000 K
Color rendering index	CRI ≥ 90; R9 ≥ 50
Light distribution	Direct
Direct ratio	approx. 100 %
Beam angle	110°
Chromaticity tolerance LED	< 3 SDCM
Luminance (L65)	≤ 23.000 cd/m²
Unified glare rating (4H 8H)	≤ 28
System of protection	IP 20
Class of protection	I with plug-in power supply; III without plug-in power supply
Technology	Touch DIM
Operation	Multi-function switch
Housing	Aluminium coloured anodised
Light source cover	Milky; Plastic
Arm	Silver metallic
Balance of articulation joints	Spring
Weight (net)	ca. 2,3 kg
Mains lead	ca. 3,4 m; Mains plug; CEE 7/VII
Fastening	Tap16; Table clamp (accessory); Screw-down flange
Add-on lens	Not available
Decorative contrast side parts	Black

Errors and technical changes excepted. Images can vary from original.
Photometric and electrical data may vary due to component tolerances.

© 20/08/2023 H.Waldmann GmbH & Co. KG

Arm-mounted luminaire TANEO TND 2100/950/D

113736000-00809767

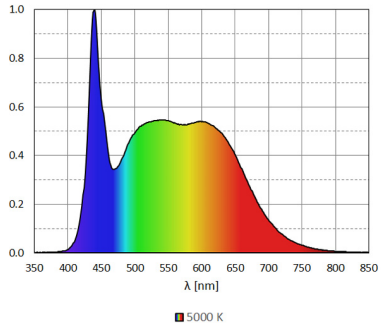

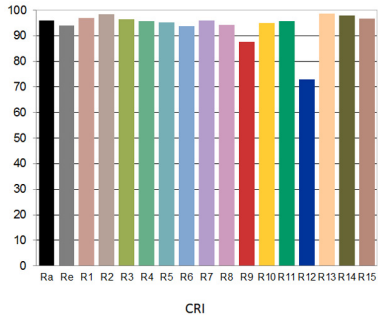

© 20/08/2023 H.Waldmann GmbH & Co. KG