Surface-mounted luminaire MACH LED PLUS.forty MLAL 126 S

113478000-00800919

Waldmann
ENGINEERS OF LIGHT

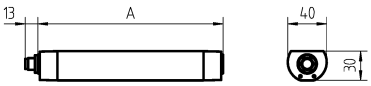

RSFM 4/0,05 P25-1

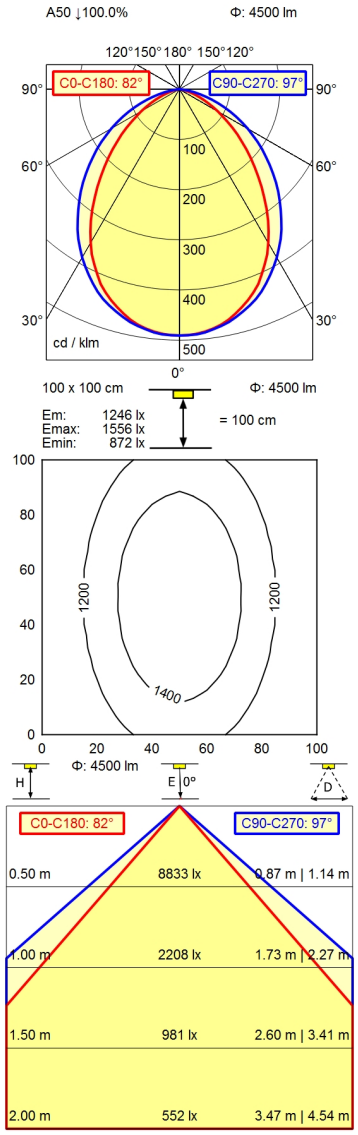

Light source	LED
Work equipment	Without
Connected load	20 - 28 V; DC
Power consumption	ca. 43 W
Luminous flux	approx. 4.500 lm
Luminous efficiency	approx. 104 lm/W
Light type/-color	Cold white
Colour temperatur	approx. 5.000 K
Color rendering index	CRI ≥ 80
Light distribution	Wide beam; Direct; Symmetric
Beam angle	90°
Chromaticity tolerance LED	< 4 SDCM
Glare control	Without
Luminance (L65)	≤ 43.000 cd/m²
Unified glare rating (4H 8H)	≤ 25
System of protection	IP 67
Class of protection	III
Technology	Switchable; -
Operation	External
Housing	Aluminium; Anodised; Aluminium coloured anodised
Light source cover	Borosilicate; Clear
Weight (net)	ca. 2,4 kg
Mains lead	Built-in plug; RSFM 4/0,05 P25-1
Design	mounted version
Fastening	L-angle; Clamp
Dimension	A=1540 mm
Minimum ambient temperature	0 °C
Maximum ambient temperature	60 °C
Special features	Suitable for higher ambient temperatures

© 20/08/2023 H.Waldmann GmbH & Co. KG

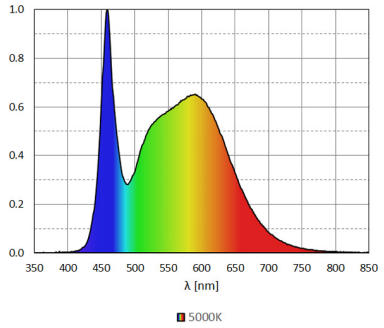

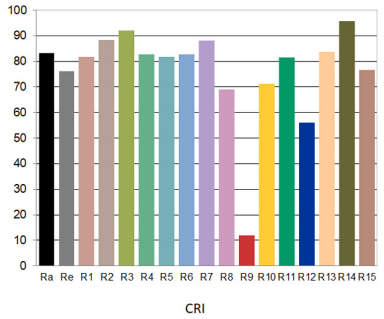

© 20/08/2023 H.Waldmann GmbH & Co. KG