DUELL Recessed 2x LED GE

110741XX-110742XX

Lamp type:LED Array

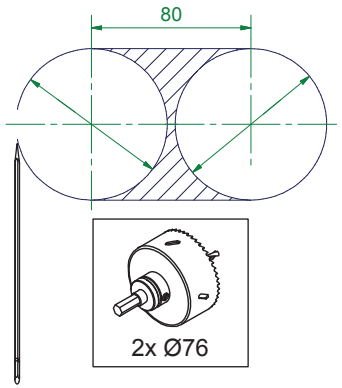

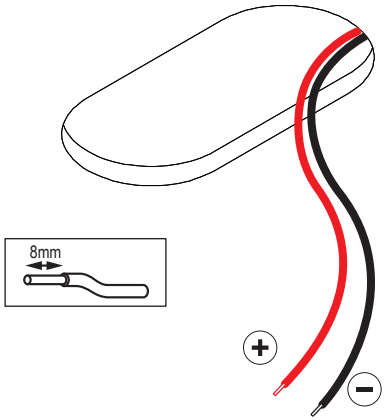

350mA - min 16,5Vf - max 19,2Vf - 6,2W
500mA - min 17,1Vf - max 19,8Vf - 9,2W

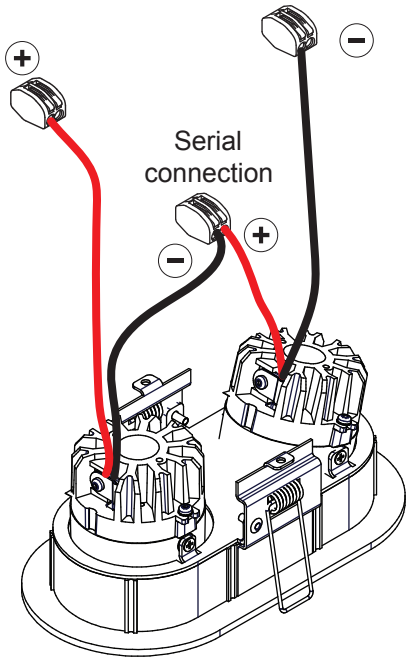

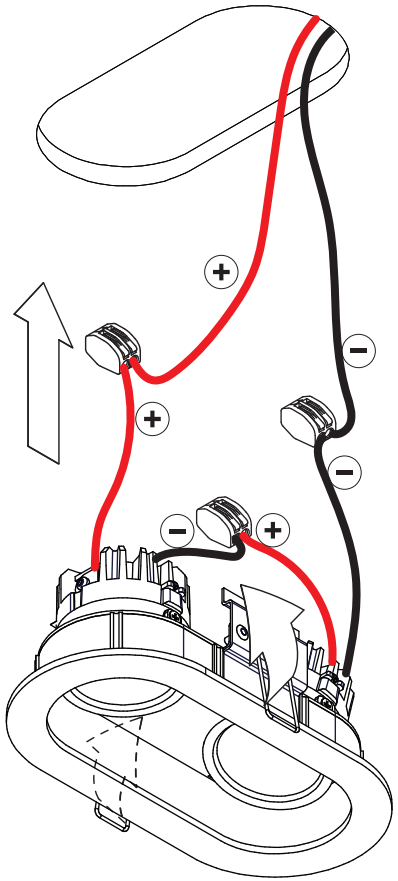

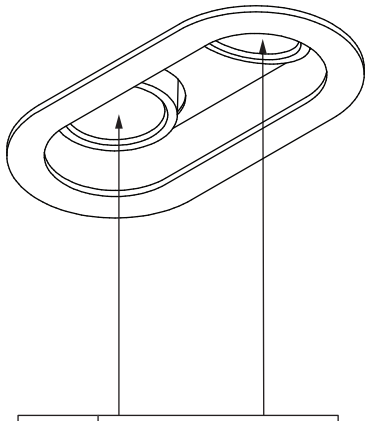

Replace protective shield when broken.
The luminaire shall only be used
complete with its protective shield.
Reference number: 1011481

The light source contained in this luminaire shall only be replaced by the manufacturer or his service agent or a similar qualified person

Drivers:
see driver matrix - latest version on website
www.supermodular.com or check sales contact

Can be used with :

10889830 Conbox outer dimension 190x192x130
12290930 Gypkit 190x190 - 2xØ76

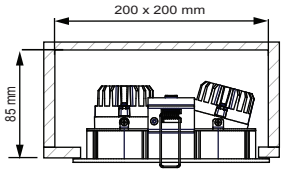

V1 - 07/05/2015