GLASHÜTTE LIMBURG

Product data sheet — Large-area pendant luminaire — 56 569.3

Project · Reference number	Date

Application
LED Large-area pendant luminaire with high light power and high uniform light distribution. Metal luminaire housing and 3 steel suspension wires.

Product description
Aluminium luminaire housing and metal canopy, chrome finish
Crystal glass, inside white
Silicone gasket
Silvergray flex suspension, semi-matt
4 × 2,5 □
steel wire suspension
Overall length of luminaire ~3000 mm
Plug connection
Connecting terminal 2.5□
Earth conductor connection
2-pole connecting terminal for digital control
LED power supply unit
220-240 V ∿ 50/60 Hz
DALI controllable
A basic isolation exists between power cable and control line
Safety class I
CE – Conformity mark
Weight: 14.5 kg

Lamp

Module connected wattage	110 W
Luminaire connected wattage	126 W
Rated temperature	$t_a = 25$ °C
Ambient temperature	$t_{a\,max} = 40$ °C

56 569.3

Module designation	6x LED-0487/830
Colour temperature	3000 K
Colour rendering index	$R_a > 80$
Module luminous flux	10130 lm
Luminaire luminous flux	4323 lm
Luminaire luminous efficiency	34,3 lm/W

56 569.3 K4

Module designation	6x LED-0487/840
Colour temperature	4000 K
Colour rendering index	$R_a > 80$
Module luminous flux	10740 lm
Luminaire luminous flux	4583 lm
Luminaire luminous efficiency	36,4 lm/W

Lifetime of the LED
Ambient temperature $t_a = 15$ °C
– at 50,000 h: L70B10
– at 66,000 h: L70B50

Ambient temperature $t_a = 25$ °C
– at 50,000 h: L70B10
– at 60,000 h: L70B50

max. ambient temperature $t_a = 40$ °C
– at 50,000 h: L70B50
– at 51,000 h: L70B50

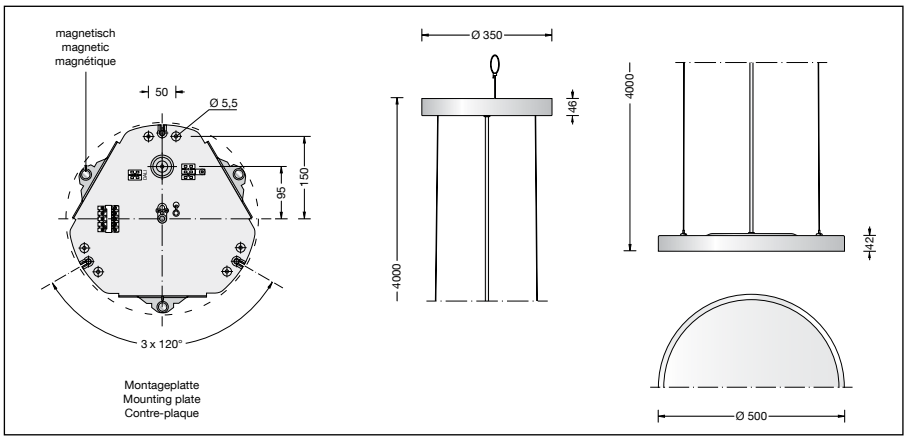

Article No. 56 569.3
Colour temperature 3000 K.
Also available with 4000 K on request.
3000 K – article number
4000 K – article number + **K4**

Finish options
- Enamel, white — Code number **.1**
- Stainless steel — Code number **.2**
- Chrome — Code number **.3**