Artemide

PRODUCT DATA SHEET

Kalifa Floor Prismoptic II - Pole central - FLUO 4x55W dimmable - White

DESIGN BY :

Ernesto Gismondi

MATERIALS :

Aluminium

DESCRIPTION :

A range of floor lamps with direct-indirect lighting using fluorescent lamps. Optical unit and pole in extruded aluminium with a white or grey paint finish. Steel base. Polycarbonate “PRISMOPTIC” diffuser. Light output ratio 70%. Light distribution: 79% indirect and 21% direct. Polycarbonate dust-protection screen (IP40). Complies with standard EN60598-1 and other specific standards.

Light emission

Direct/indirect

IP20

+ –

TECHNICAL DATA SHEET

Features

Product name:	Kalifa Floor Prismoptic II - Pole central - FLUO 4x55W dimmable - White
Article Code:	M168721
Colour:	White
Material:	Aluminium
Series:	Architectural
Environment:	Indoor
Area contract:	

OPTICS

Emission:	Direct/indirect

DIMENSIONS

Length:	(cm) 58.7
Width:	(cm) 36.1
Height:	(cm) 190
Cutout shape:	
Weight:	14

LAMPS NOT INCLUDED

Category:	FLUO
Number:	4
Lbs:	TC-LEL
Watt:	55
Socket:	2G11
Type:	FSDH
Luminous Flux (lm):	4800
Colour Rendering:	85
Colour temperature (K):	3000
Duration (h):	12000

Dimensions

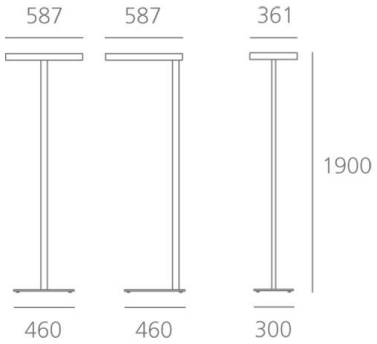

LAMP

IP20

+ –

ELECTRICAL

Starter:	Electronic dimmable Integrated
Voltage:	220V-240V